Extract from Windlass Operating Instructions

5-1. WINDLASS/MOORING WINCH

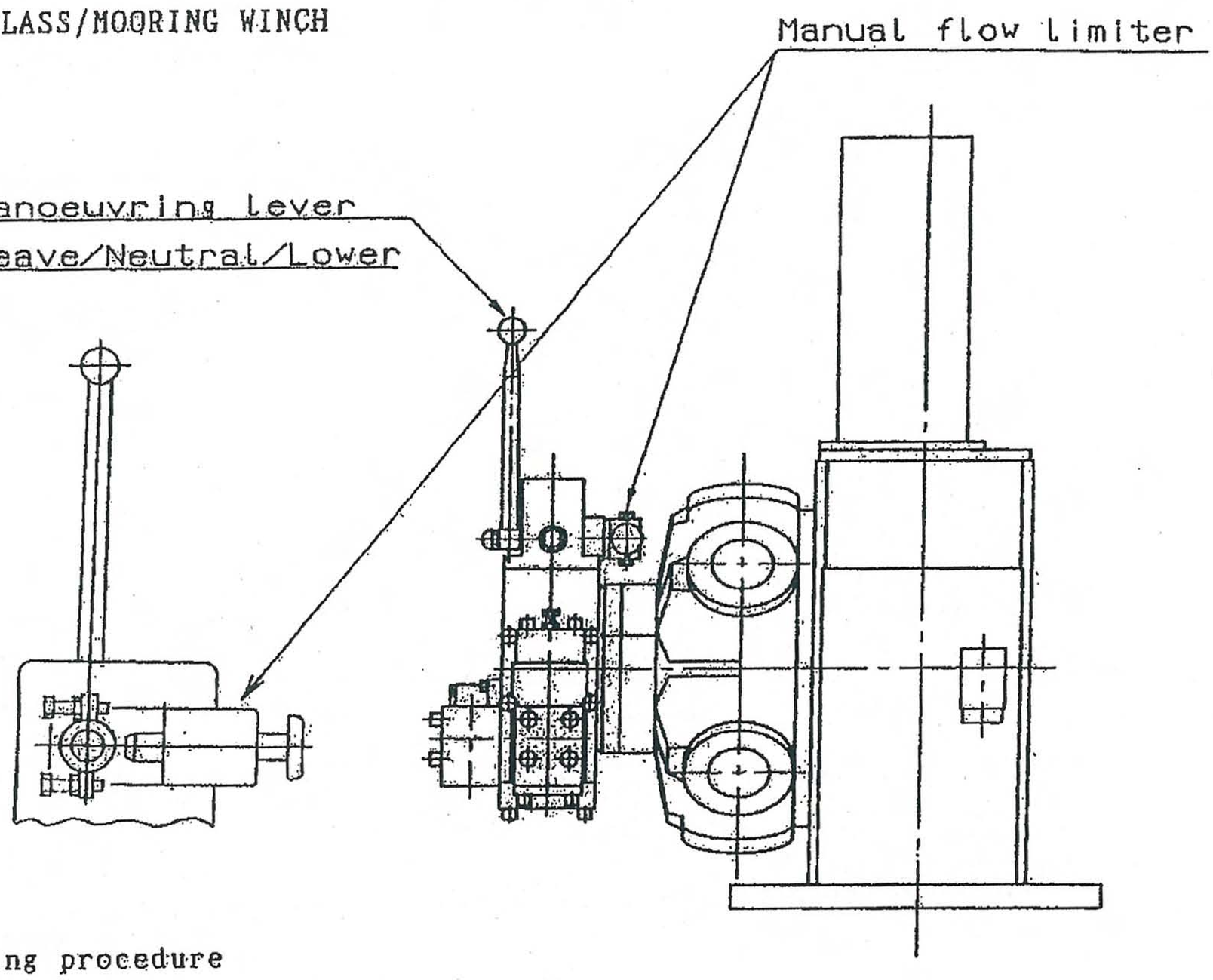

A. Anchoring procedure

1) Start the pump on the pump station.

   * Note :

     Confirm that the manual flow limiter is at the "WINDLASS" position.

     When the windlass is operated with the manual flow limiter set at the "MOORING" position, rated speed can not be speed.

2) Uncover the chain pipe.

3) Check that the brake of windlass is set tight.

   * Check that the brake of mooring winch is set tight and the clutch is "OUT"

4) Engage the actual coupling by pushing the coupling lever and necessary, moving the control lever to and fro around the "NEUTRAL" position.

   Lock the coupling lever with the locking pin.

   * The clutch lever is equipped with a inter lock valve.

     This valve is automatically made low speed for the clutch "IN".

5) Remove the lashing wire of the anchor.

6) Remove the chain stopper with the control lever set "HEAVE" (pulling to this side), an then return the control lever to "NEUTRAL".

7) Release the brake of windlass.

8. Lower the anchor slowly to the water surface by handling the control lever to "Lower" (pushing forward).
9. When the anchor reached the water surface, return the control lever to "Neutral", and stop the cable lifter.
10. Tighten the brake of windlass.
11. Operate the winch slowly in the normal, direction and the reverse direction by means of the control lever, and set the clutch at "OUT" by means of the clutch lever.
12. Release the brake slowly by means of the brake handle, and drop the anchor.
    * When the anchoring speed is too high, it is possible that the anchor runs away and the brake lining is damaged by heat, and drop the anchor repeating drop and storage at every 1/2 shackle.
13. After the anchor and the chain are lowered to the specified length tighten the brake by means of the brake handle.
14. Apply the chain stopper.
15. When other winches are not used, stop the pumps on the pump station.

B. Stowing the anchor:

1) Start the pump on the pump station.
2) Check to ensure that cable lifter brake is tightened.
3) Operate the windlass at a very low speed to align pawls of the cable lifter clutch and engage the clutch by the clutch lever.
4) Remove the chain stopper.
5) Take off the brake by means of brake handle.
6) Heave the anchor to the water surface by handling the control lever to "HEAVE".
7) When the anchor reached the water surface, return the control lever to "NEUTRAL", and stop the cable lifter.
8) Stow the anchor by handling the control lever to "HEAVE".
   * For stowing the anchor, heave the anchor very slowly.
9) Apply the chain stopper with the control lever set "Heave", an then return the control lever to "Neutral".
10) Apply the brake by means of brake handle.
11) Move the control lever of the winch for windlass in the direction of heaving or lowering slowly operate and disengage the clutch by the clutch lever.
12) Apply the lashing wire of the anchor.
13) Apply the hose pipe and chain pipe cover.
14) When other winches are not used, stop the pumps on the pump station.

C. Attention to be paid to windlass operation in rough weather

During windlass operation in rough weather, the load to windlass change constantly under influence of wind, tide and wave.
In sone cases, the windlass gets excessive load in a moment.
Especially, when the anchor is weighed during it's run on the sea bottom, it is possible that the anchor is caught by rocks on the bottom of the sea and gets excessive load in a moment, which will cause troubles.
Accordingly, during the anchor weighting operation in rough weather.
It is necessary to loosen the chain from tension by operating the engine of the ship so as to avoid excessive load the windlass.

In case the windlass stalls during heaving the anchor(in case heaving of the anchor is stalled by an excessive load applied to the windlass over its heaving capacity), return the handle to the "NEUTRAL" position, and lower the chain a little.
Then, return the handle to the "NEUTRAL" position again, and increase the engine rotation of the ship.
Make anchor heaving operation after reducing the load applied to the windlass.

Extract from Scinicariello Safety Management Systems

SHIPBOARD OPERATIONAL PROCEDURES	OPS. 13

General Description: **Precaution when the Ship is at Anchor**

When the ship is at anchor the Master shall take such precautions as to avoid danger to the ship and personnel. These precautions shall take into account the following :

- Area used for anchoring (open sea or protected area)
- Main engines readiness for manoeuvring
- Precautions against act of piracy (in certain areas only (**see instruction EMP 6.2**)
- Weather forecast
- Bridge and or deck attendance
- Nature of the bottom

The following requirements should always be complied with :

(i) on arrival, the Master shall take note of all information regarding any special requirement of the Port Authority with reference to the minimum number and rank of the personnel always to be present on board

(ii) notwithstanding the above, a minimum number of seafarers must remain on board to ensure compliance with the following requirements :

- deck, engine and radio watch-keeping
- at least one Deck Senior Officer and one Engine Senior Officer are always to be present

(i) in non-protected areas, the engines should be ready for manoeuvring within one hour maximum

(ii) frequent checks of ship's position with different means

(iii) ensure that ship does not drag

(iv) ensure that windlasses are not releasing

(v) safe distance from the closest ship

Reference : ICS Bridge Procedures Guide
Standing Orders

SHIPBOARD OPERATIONAL PROCEDURES	OPS. 14

General Description: **Anchor Position and Use**

When passage planning, the Navigator shall mark charts with all necessary information including the drop bearing and/or range at the anchorage.

As soon as the vessel is settled into its anchored position, fixes must be taken, plotted and bearing entered into Deck Logbook. Entry shall include at least three bearing of prominent marks.
The vessel's position must be plotted at least hourly.
The vessel's position shall be continuously monitored.

If radar is being used for anchor fixes during periods of restricted visibility, proper allowance shall be made for potential bearing and range errors due to beam width, counter of shore marks, calibration of equipment, weather etc.
Care must be taken to use prominent marks.

Appropriate signals shall be used in restricted visibility in accordance with COLREG.

When use a single anchor, the other anchor shall be ready for immediate emergency use.

Prior to entering restricted waters, condition permitting, both bow anchors shall be prepared for letting-go. Condition permitting, both anchors, shall be broken-out of their hawspipes to ensure that they will free if needed.

Officer attending the anchor shall maintain the communications with bridge.

COLREG signals shall be displayed as required for an anchored vessel.

Reference : COLREG
Standing Orders

Annex C

Teesport / CATS mobilisation of tugs agreement

1027
J52

C.A.T.S
CENTRAL AREA TRANSMISSION SYSTEM

Amoco CATS Terminal & Onshore Pipeline
Seal Sands Road,
Seal Sands,
Middlesbrough,
Cleveland TS2 1UB
Tel
Fax

2 May 1995

Harbour Master
Tees & Hartlepool Port Authority
Queen's Square
Middlesbrough
TS2 1AH

Dear

Re: CATS Pipeline

Some weeks ago we discussed the potential risk of damage to the CATS Pipeline from vessels operating within the vicinity.

Further to those discussions, we are pleased to confirm our authorisation for you to take such steps as you deem necessary to protect the integrity of the pipeline including the mobilisation of Tugs.

We would ask that you inform the Chief Operator at the CATS Terminal immediately such action is taken, and to keep all laser disks, audio and written logs that you make.

We will, of course reimburse all costs necessarily incurred, although we will require a written report from yourself with regard to each incident.

Yours sincerely

CATS Terminal Operations Engineer

T.H.P.A.
HARBOURMASTER
3 MAY 1995

		ACTION
H.M.		
O.H.M.		
S.A.H.M.		
H.M.C.		

Extract from PD Teesport Integrated Management System

ANCHORED SHIP — NO: 761-101

1. **SCOPE**

This Standard relates to the duties of the Assistant Harbour Master relative to the anchoring of a ship in Tees Bay.

2. **RESPONSIBILITY**

2.1 It is the responsibility of the Duty Assistant Harbour Master to ensure that the activities contained in this Standard are carried out, and the necessary records kept up-to-date, and that he is, at all times, fully aware of the current position relative to anchored ships.

2.2 It is the responsibility of the Duty VTS Officer to ensure that he is aware of the current situation regarding anchored ships, and to assist the Duty Assistant Harbour Master in the maintaining of records, as required.

3. **PROCEDURE**

3.1 When a weather forecast is received at the Port Operations Centre, which indicates that winds of gale force 8 or above are imminent (i.e., due within 6 hours), in sea area “Tyne”, the Duty Assistant Harbour Master will endeavour to verify with any ship then anchored within the jurisdiction of PD Teesport, or any ship which proposes to anchor within that jurisdiction during the currency of the gale warning, that the ship is aware of such gale warning and establish the ship’s intentions in respect to it.

3.1.1 In the case of a vessel anchored off the port outside such jurisdiction, the Duty Assistant Harbour Master will likewise verify that the ship is aware of such gale warning when, in his opinion, the direction of wind forecast in relation to the position of the ship is such that any dragging of the ship’s anchor could result in the ship, any undersea pipeline or any port installation, including buoys, being placed at risk.

3.1.2 He will record details of any ship so contacted, and of any response, in the Message Book (H60103).

3.2 **Preamble:**

3.2.1 It is to be expected that most vessels intending to anchor in Tees Bay will have declared their intentions in advance, and the Port Operations Centre staff will be expecting the manoeuvre; however, on occasion vessels will either arrive unannounced, or a vessel will anchor unexpectedly due to some unforeseen contingency.

3.2.2 The Port Operations Centre staff must, therefore be alert at all times to this possibility and must monitor the situation via the harbour radar system on a regular basis, particular attention being paid to the pipeline “Protected Areas” see Management Standard 761-102 - "Oil and Gas Pipelines in Tees Bay".

3.3 **Vessels Approaching the Anchorage:**

3.3.1 The Duty Assistant Harbour Master must closely monitor ALL vessels approaching the anchorage, for the reasons stated above.

3.3.2 The Duty Assistant Harbour Master must ensure that any vessel known to be intending to anchor is questioned about its intended anchoring position, and that this position is verified, by reference to the harbour radar and/or the relevant Admiralty chart, to ensure that it is not close to, or within the limits of any prohibited anchoring area (e.g., round the Tees Fairway Buoy) or in close proximity to the pipeline “Protected Areas” see the "Oil and Gas Pipelines in Tees Bay" Standard.

3.3.3 Where the proposed anchorage position is not acceptable (see paragraph 3.3.2 above), the Duty Assistant Harbour Master must so advise the vessel concerned, and instruct the Master that he must select an alternative anchoring position (see paragraphs 3.3.4 and 3.3.5 below).

3.3.4 Where a vessels proposed anchoring position falls within the “sensitive fishing ground” to the North of the Ekofisk Pipeline, the Duty Assistant Harbour Master will ensure that the instructions contained in the Harbour Master’s memo of 26 February 1996 are complied with (see also paragraph 3.3.5 below).

3.3.5 Vessels requesting anchoring positions must be given only general areas and NOT specific positions in which to anchor.

3.4 **Vessel Anchoring:**

After the vessel has anchored, details of the anchor position and date and time of anchoring must be recorded on the “Anchor/Steaming” program of the in-house computer, and the vessel identified on the harbour radar display.

3.5 **Vessel at Anchor:**

During the period at anchor, the vessel’s position must be monitored frequently, to ensure that any movement, e.g., dragging, is noticed and brought to the vessel’s attention.

3.6 **Vessel Weighing Anchor:**

After the vessel has weighed anchor, details of the date, time and vessel's destination, must be recorded on the "Anchor/Steaming" program of the computer.

3.7 **After Weighing:**

If the vessel is bound into the Port, go to Management Standard 764-102 - "Ship Movement Control".

Authorised By:	**Noted By:**

OIL AND GAS PIPELINES IN TEES BAY — NO: 761-102

1. **SCOPE**

This Standard relates to the monitoring of shipping within the areas of the Ekofisk Oil Pipeline and the CATS Gas Pipeline and the actions to be taken to avoid, so far as possible, the anchoring of a ship on, or in close proximity to, either pipeline.

2. **RESPONSIBILITY**

2.1 It is the responsibility of the Duty Assistant Harbour Master to initiate this Standard whenever circumstances so indicate.

2.2 It is the responsibility of the Duty VTS Officer to assist as required in the execution of this Standard.

3. **PROCEDURE**

3.1 **Protected Areas:**

3.1.1 The Ekofisk Oil Pipeline is a 34” undersea pipeline, operated by ConocoPhillips Petroleum (UK) Limited and running from a point on the coast north of the Tees entrance to the Ekofisk Oil Field in the North Sea, while the CATS Pipeline is a 36” high-pressure undersea gas pipeline, operated by Amoco and running from a point on the coast south of the Tees entrance to the Everest and Lomond oil and gas fields, also in the North Sea.

3.1.2 Admiralty Charts of the area where the pipelines run show the positions of both pipelines, together with a note requesting mariners not to anchor or trawl within 2.5 cables of the pipelines and warning of possible risks and prosecution if damage should be caused to a pipeline.

3.1.3 A “Protected Area” in respect of each pipeline is displayed on the Harbour Radar System; extending 20 miles to seaward from the South Gare, that for the Ekofisk Oil Pipeline covers an area 2.5 cables either side of the Pipeline, while that for the CATS Pipeline covers an area 5 cables to the south of the pipeline and 2.5 cables to the north of it.

3.1.4 Within these areas a visual and audible alarm occurs if a tracked target:

- enters either area at a speed of less than 2 knots; or
- once inside either area, reduces speed below 2 knots

3.2 **Alarm Operating:**

3.2.1 **Vessel's Intentions Known:**

On the majority of occasions when the pipeline alarm on the harbour radar system operates, the Duty Assistant Harbour Master will, having complied with Management Standard 761-101 - "Anchored Ship, have already established that the vessel concerned, although reducing speed within one of the "Protected Areas", has no intention of anchoring there and therefore have no need to take any further action, other than to monitor the vessel and if necessary proceed to paragraph 3.3 of this Standard.

3.2.2 **Vessel's Intentions Not Known:**

When the alarm operates in respect of either an unidentified vessel, or one whose intentions are in doubt the Duty Assistant Harbour Master will make every attempt to identify and contact the vessel on VHF radio, if necessary requesting the assistance of ships or other craft in identifying and contacting the vessel concerned. (See letter from Phillips ref PJH-038-94-MH of 10 June 1994.)

3.3 **Alarm Equipment Not Operating Correctly:**

Whenever the alarm equipment is known not to be operating correctly, (see Management Standard 781-103 - "Port Operations Centre Equipment Failure", the Duty Assistant Harbour Master must monitor the pipeline areas frequently for any shipping within or close to either of those areas. Whenever he considers that a ship's position, course and speed are such that the alarm would normally have been triggered, he must implement relevant parts of this Standard as if the alarm had operated.

3.4 **Contact Established:**

3.4.1 Once VHF radio contact has been made with the vessel concerned, the Duty Assistant Harbour Master will establish whether there is any intention to anchor the vessel.

3.4.2 If no such intention is declared, the Duty Assistant Harbour Master need take no further action, other than to verify that the vessel is aware of the positions of the pipelines, and then to continue monitoring the vessel.

3.4.3 Where the vessel does intend to anchor, the Duty Assistant Harbour Master will instruct the Master not to anchor in the pipeline areas, at the same time verifying that the vessel is aware of the pipeline locations. He will continue to monitor the vessel until it is well clear of the pipeline protected areas.

3.4.4 Where the vessel reports that it has already anchored, the Duty Assistant Harbour Master will establish whether the vessel is aware of the location of the pipeline concerned, and that the vessel's position is in close proximity to this. He will establish from the vessel the following:

- Vessel's estimated position when letting go to the anchor.
- Vessel's heading when letting go.
- Present heading.
- Which anchor has been dropped, and amount of cable out.
- Direction in which the cable is leading.
- Bearing and distance of the vessel from the South Gare radar tower, obtained from the harbour radar system.

The Duty Assistant Harbour Master will then instruct the vessel to have the main engines ready, but not to attempt to heave the anchor until so instructed by Tees Ports Control; he will also warn the vessel to be prepared to slip the anchor, after buoying it. He will instruct the vessel to maintain a listening watch on VHF radio Channel 14 in the meantime. He will immediately advise ConocoPhillips or Amoco, as appropriate, of the circumstances, passing all relevant information and seeking their guidance. (See paragraph 3.5 of this Standard.) He will also advise the Harbour Master.

3.4.5 If, for any reason, a vessel requires tug assistance in order to avoid posing a risk to the Ekofisk or CATS pipeline (e.g., anchor dragging and unable to use main engines), the Duty Assistant Harbour Master will arrange this in accordance with letter from Phillips ref PJH-038-94-MH of 10 June 1994 or letter from Amoco dated 2 May 1995, as appropriate, (see also Management Standard 762-115 - "Immobilised Vessels".

3.5 **Contacting Pipeline Operators:**

3.5.1 **ConocoPhillips (for Ekofisk Pipeline):**

Whenever this Standard requires that ConocoPhillips be contacted, this will normally be done by means of the direct telephone link from the Port Operations Centre to ConocoPhillips Jetty Control Room. If for any reason, this is not available, then the normal telephone must be used, utilising the ConocoPhillips exchange number as held in the Port Operations Centre, and asking for the “Jetty Supervisor”.

3.5.2 **Amoco (for CATS Pipeline):**

Whenever this Standard requires that Amoco be contacted, this must be done using the normal telephone, and utilising the Amoco exchange number as held in the Port Operations Centre, asking for the “Duty Chief Operator”.

3.6 **Response from Pipeline Operator:**

On receipt of a response from the Pipeline Operator concerned, the Duty Assistant Harbour Master will advise the Harbour Master of this, and of the Pipeline Operator’s requested course of action. He will then implement the course of action agreed, which will depend on the circumstances of the individual case and may differ in the light of the Harbour Master’s requirements, from that initially requested by the Pipeline Operator.

3.7 **Follow-up Action:**

The Duty Assistant Harbour Master will instruct the vessel in what action to take in the light of the response from the Pipeline Operator concerned and the decision taken (see paragraph 3.6 of this Standard). He will then monitor the results of such action, keeping both the Harbour Master and the Pipeline Operator concerned fully informed and implementing as required any new or amended action, which may be agreed in the light of subsequent events.

3.8 Reports/Logs

The Duty Assistant Harbour Master will initiate a log of events and maintain this during the course of any incident, which involves notifying the Pipeline Operator. (See Management Standard 783-102 - "Port Incident". He will submit this to the Harbour Master after the incident has closed, and also ensure that all relevant VHF radio and radar logging tapes are removed from the system, labelled with the date, time and name of the ship involved and held until no longer required.

Authorised By:	**Noted By:**

TEES HARBOUR RADAR — NO: 772-102

1. This Standard cancels and supersedes all previous Operating Instructions and memos appertaining to the operation of the Teesport Harbour Surveillance Radar System.

2. The Teesport Harbour Surveillance Radar System, which includes equipment at remote sites as well as that located in the Port Operations Centre, is to be operated, so far as reasonably practicable, at maximum efficiency on a 24 hours per day throughout the year basis, for the purpose of continually monitoring the shipping in the port and the approaches thereto, the radar information is continuously and automatically recorded (see paragraph 7 below).

3. Full instructions for the operation of the Radar and associated equipment are contained in the Norcontrol "Operations Manuals" 772-102-1/772-102-2.

4. The Duty Assistant Harbour Master must ensure that, at all times and in accordance with the instructions in the above paragraph, the radar displays are set up in what he considers the optimum manner for the prevailing conditions of weather and shipping activity, taking into account any faults which may cause one or more displays to be temporarily unavailable or below peak efficiency.

5. The Duty Assistant Harbour Master will ensure that when any fault occurs in the radar system:

   5.1 The fault is recorded and reported in accordance with Management Standard 781-103 - "Port Operations Centre Equipment Failure".

   5.2 When such fault results in a substantial loss of coverage in Tees Bay, that it is advised by telephone to ConocoPhillips as soon as reasonably practicable and followed up with a fax giving as much information about the fault as possible.

   5.3 Following restoration of normal coverage, ConocoPhillips should similarly be advised by telephone and fax. The sending of any fax required by this paragraph must be recorded in the Message Book (796-106-1).

6. The Duty Assistant Harbour Master will ensure that a "Radar Recording Log" (772-102-1), the purpose of which is to keep a composite record of all aspects of the Radar System, is maintained and that the following are recorded therein:

   6.1 a brief note cross-referencing any fault recorded in accordance with paragraph 4 above;

   6.2 a brief note of any changes made to the "operating system", i.e., mask and overlay changes, etc;

6.3 details of any "untoward" happenings, e.g., lost or swapped labels or targets, fault alarms not covered in paragraph 6.1 above, etc;

6.4 any other detail of the operation of the system, including times of weekly changeover of transmitters at all sites, which he considers relevant.

7. **Recording and Storage of Radar Information:**

7.1 The plotting and tracking data is recorded continuously and automatically to the hard disk of a VLR 5060 Replay System, located in the Harbour Office Equipment Room, capable of holding, in a "one file per hour" format, four to five months of data. When the disk is full, it commences overwriting the earliest files.

7.2 Following any shipping or other incident where recorded radar information may be required, the Duty Assistant Harbour Master will ensure that the Deputy Harbour Master is aware of this. The latter will then ensure that the relevant files are copied to the "Incidents" Directory of the VLR 5060, in order to make certain, as far as reasonably possible, that they are retained until such time as the Harbour Master instructs otherwise.

Authorised By:	**Noted By:**

PORT OPERATIONS CENTRE EQUIPMENT FAILURE — NO: 781-103

1. **SCOPE**

1.1 This Standard relates to the reporting, rectification and recording of failures in any item of Port Operations Centre equipment.

1.2 For the purpose of this Standard, the expression “Port Operations Centre Equipment” is deemed to include those items located at remote sites and linked to the Port Operations Centre by microwave link, radio or landline; it also includes the Tees Dock Roundhead fixed tide gauge board, together with the floodlight associated with it.

2. **RESPONSIBILITY**

2.1 It is the responsibility of the Duty Assistant Harbour Master to ensure that:

2.1 this Standard is initiated in respect of any fault that occurs in any of the Port Operations Centre equipment;

2.2 all records are maintained and to implement any follow-up action which may be required;

2.3 an adequate supply is available of all consumable items, which may be required to keep all the Port Operations Centre equipment functioning efficiently.

2.2 It is the responsibility of the Duty VTS Officer to assist as required in the maintenance of this Standard and to bring to the attention of the Duty Assistant Harbour Master any failures or deficiencies of which he becomes aware.

3. **PROCEDURE**

3.1 All items of Port Operations Centre equipment must be monitored regularly to ensure that they are functioning at maximum efficiency, any instance of an item not so functioning must be recorded on a Port Operations Centre Equipment Fault Report form (781-103-2) and inserted in the appropriate section of the Duty File (H50808).

3.2 Whenever a fault occurs, it must be reported to the relevant service company listed in the Port Operations Centre Maintenance and Repair Assistance List (781-103-3), which is held in Section 10 of the Reference File (H50810).

3.3 If the fault occurs outside normal office hours, the Duty Assistant Harbour Master will assess, in light of the scale of the failure, its impact on the efficient operation of the Port Operations Centre, weather conditions, level of shipping activity in the port etc., whether the call-out procedure requires immediate implementation, or whether it can reasonably be left until the next period of office-hours. In this case, it must be passed on to each relieving Duty Assistant Harbour Master (see paragraph 3.3.1 of Management Standard 765-102 - "Port Operations Centre Relieving Procedure [Duty Assistant Harbour Master]) until such time as it can be reported in accordance the Port Operations Centre Maintenance and Repair Assistance List (781-103-3), which is held in Section 10 of the Reference File (H50810).

3.4 The Duty Assistant Harbour Master will monitor the progress of any outstanding repair, following up as necessary and recording any action or comment on the relevant Port Operations Centre Equipment Failure Report Form (781-103-2).

3.5 The Duty Assistant Harbour Master must ensure that the time and date of remedial action is recorded on the relevant Port Operations Centre Equipment Failure Report (781-103-2) this must then be removed from the Duty File (H50808) and retained on file for a period not less than five years, in accordance with Management Standard 695-102 - "System Records".

Authorised By:	**Noted By:**